REGIOLUX

Accessories - Mounting frame

Mounting frame for clean room luminaire aduna Housing colour traffic white RAL 9016; Mounting frame for aduna 1200

CHARACTERISTICS

Order number	62129000100
EAN number	4020863450329
Commodity code	94059900
Certification mark	Indoor, CE

MECHANICS

Housing colour	traffic white RAL 9016
Dimensions (LxWxH/DxH)	1197mm x 370mm x 88mm
Ceiling system	cut-out ceilings [AD]
Ceiling cut-out (LxW/D)	1182mm x 350mm
Installation depth	400mm [AD]; 400mm [s-TS] min
Weight (net)	3.8kg
Type of installation	Installation in clean room ceilings, Ceiling installation individual mounting

Dimensions

L	1197 mm	Length
B	370 mm	Width
H	88 mm	Height
A1	1070 mm	Mounting distance single mounting
A1 alternativ	1108 mm	Mounting distance single mounting (alternatively)
A4	430 mm	Mounting distance (width)
DA(L)	1182 mm	Cutting dimension length
DA(B)	350 mm	Cutting dimension width
Et(min)	400 mm	Ceiling distance minimum - minimum dimension (visible T-rail)
Et(AD)	400 mm	Ceiling distance minimum (cut-out ceiling)

DEEP-LINK
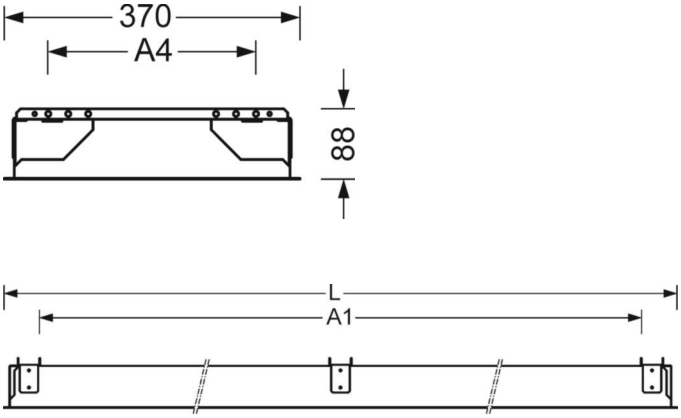
https://www.regiolux.de/en/article/62129000100